NOVA LUCE

PRODUCT DATASHEET

Version: 001

PRODUCT PHOTOGRAPH

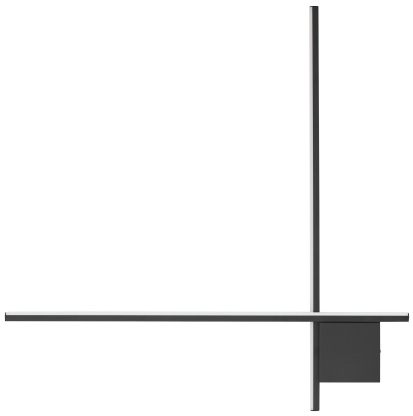

TECHNICAL DRAWING

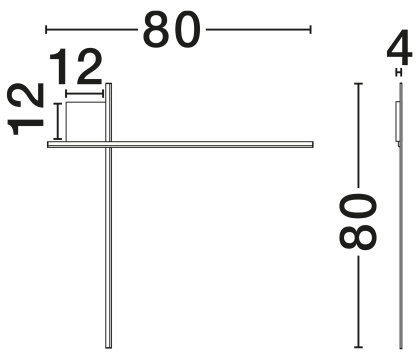

GENERAL INFORMATION

Product Code	**9006086**
Collection	**Indoor**
Product Category	**Wall**
Product Family	**Cross**
Mounting Location	**Wall**
Application Environment	**Indoor**
Specifications	**N/A**

DIMENSION & WEIGHT

LxWxH (cm)	**L: 80 W: 4 H: 80**
Cut Out (cm)	**N/A**
Weight (Kgr)	**1.2**

MATERIAL & COLOR

Product Color	**Sandy Black**
Body Material	**Aluminium**

APPLICATION & MOUNTING

Ambient Working Temp.	**Max 45°C**
Type of Protection	**IP20**
Dimmable	**Yes**
Type of Dimming	**Triac**
Mounting type	**Surface**
Mounting Depth (cm)	**N/A**
Led Module Replaceable	**No**
Light Sourse	**LED**

NOVA LUCE S.A

Schimatari Viotias
32009, Greece

+30 22620 58 121
+30 22620 56 743

info@novaluce.com
www.novaluce.com

NOVA LUCE

PRODUCT DATASHEET

Version: 001

ELECTRICAL DATA

Power (Nominal)	**21W**
Input voltage (Nominal)	**220-240V**
Mains Frequency	**50/60Hz**

PHOTOMETRICAL DATA

Luminus Flux	**1351lm**
Color Temperature	**2700K**
Light Color (Designation)	**Warm White**

WARRANTY

Warranty	**3 Years**

CERTIFICATES

Certificates	**CE,UKCA**

NOVA LUCE S.A

Schimatari Viotias
32009, Greece

+30 22620 58 121
+30 22620 56 743

info@novaluce.com
www.novaluce.com