NOVA LUCE

PRODUCT DATASHEET

Version: 001

PRODUCT PHOTOGRAPH

TECHNICAL DRAWING

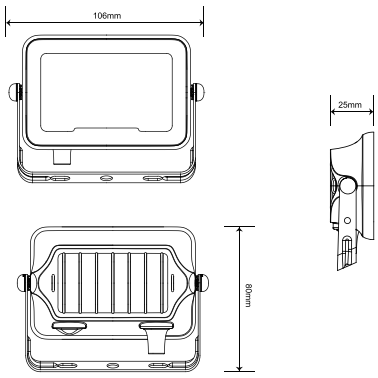

COMPATIBLE WITH

— On/Off Driver: Included
— Triac Driver: N/A
— Dali Driver: N/A

GENERAL INFORMATION

Product Code	**9050806**
Product Category	**Floodlights**
Product Family	**Grotto**
Mounting Location	**Ground/Wall**
Application Environment	**Outdoor**

DIMENSION & WEIGHT

LxWxH (cm)	**L: 10.6 W: 2.5 H: 8**
Cut out (cm)	**-**
Weight (Kgr)	**0.145**

MATERIAL & COLOR

Product Color	**Black**
Body Material	**Aluminium**
Cover Material	**N/A**

APPLICATION & MOUNTING

Ambient Working Temp.	**Max 40 oC**
Type of Protection	**IP66**
Protection Class IK	**IK06**
Dimmable	**N/A**
Type of Dimming (Optional)	**N/A**
Mounting type	**Surface**
Mounting Depth (cm)	**N/A**
Led Module Replaceable	**No**
Light Source	**Led**

NOVA LUCE S.A

Schimatari Viotias
32009, Greece

+30 22620 58 121
+30 22620 56 743

info@novaluce.com
www.novaluce.com

NOVA LUCE

PRODUCT DATASHEET

Version: 001

ELECTRICAL DATA

Power (Nominal)	**10W**
Input voltage (Nominal)	**220-240Vac**
Mains Frequency	**50/60Hz**
Output voltage	**N/A**
Output Current	**N/A**
Power Factor	**0.9**
Efficiency	**N/A**
SVM	**N/A**
Pst	**N/A**
Class	**I**

PHOTOMETRICAL DATA

Luminus Flux	**1100lm**
Luminous Efficacy	**110lm/w**
Color Temperature	**4000K**
Light Color (Designation)	**Neutral White**
CRI	**>80**
Step MacAdam	**<6**
Beam Angle	**120°**
UGR	**N/A**

LIFESPAN

Lifetime	**30000h**

CERTIFICATES

Certificates	**CE**

WARRANTY

Warranty	**5 years**

LIGHT DISTRIBUTION